Lifting Point POWERTEX LPD

Product information

Introducing the POWERTEX Lifting point with a decentred link – LPD The LPD is a robust solution forindustrial environments that demand precision and durability in material handling. This lifting point is engineered to rotate 360 degrees and pivot up to 150 degrees, offering a versatile range of motion. The unique design features a forged housing with two pressed-in washers and a bolt equipped with a locking ring for secure interlocking. A spacious forged D-shaped link is securely locked within the housing opening. The bolt head is designed for versatility with an outer hexagonal grip and a hex socket cap grip, ensuring easy installation with various tools. The LPD is the quietest lifting point in the range, having a spring that removes rattling sound, making it suitable for use on vibrating machines and vehicles. The spring also allows the D-ring to be left in a vertical position. Original Powertex bolts are available in longer lengths to suit diverse requirements.

Allowed Loading directions:

- Same WLL in all directions
- 360° rotation, 150° pivot motion from vertical
- The LPD is not designed to rotate under load (choose LPB instead)

Product Features:

- Durabable finish: Coated in PURE RED powder paint, the LPD lifting points stand out for their durability and corrosion resistance.
- Compliance to standard: Manufactured to meet the testing requirements specified by EN 1677-1, ensuring high safety and quality standards.
- Reliable: Designed with a safety factor of at least 4 in the intended load directions, offering a secure lifting experience.
- Quality assurance: Each component undergoes crack detection testing in the factory and all forged links are proof load tested to ensure reliability.
- Type testing: Each model undergoes factory type testing including breaking tests and fatigue test to 20,000 cycles at 1.5 times the WLL, highlighting the product's endurance.
- Full traceability: Every component is marked with POWERTEX branding, model name, WLL, CE-mark, UKCA-mark, and a traceability code ensuring traceability to the production lot and raw materials.
- Uniform WLL: The LPD maintains the same WLL in all directions, simplifying load planning and increasing versatility.
- Harmless: Chromium 6 free, aligning with environmental safety standards.
- Certificates included: Comes with a POWERTEX 2.2 certificate & Declaration of Conformity with each box, confirming compliance with EC and UK regulations.

- Wide temperature range: Optimized for use between -40°C to +200°C without WLL reduction, with permissible WLL reductions for higher temperature ranges, ensuring adaptability to various environments.

Features: 360 degrees rotatable, quiet, spacious link, longer bolts available
Material: Forged alloy steel
Marking: According to standard, CE-marked, UKCA-marked, POWERTEX, model name, WLL and batch number
Temperature range: -40 up to +200°C without reduction in WLL
Finish: Powder painted in PURE RED
Standard: EN 1677-1
Note: Before use, review the WLL diagram to select the correct LPD for your application

Part Code	WLL ton	Thread mm	Model	Torque Nm	A mm	B mm	C mm	D mm	E mm	F mm	G mm	H mm	S mm	SW mm	Weight kg
4215LPDM8	0.3	M8	LPD-M8	30	34	37	42	14	11	98.5	57	36	6	13	0.5
4215LPDM10	0.63	M10	LPD-M10	60	34	37	44	14	16	98.5	57	36	6	16	0.5
4215LPDM12	1	M12	LPD-M12	100	34	37	45	14	18	98.5	57	36	8	18	0.5
4215LPDM16	1.5	M16	LPD-M16	150	34	37	48	14	24	98.5	57	36	10	24	0.55
4215LPDM20	2.5	M20	LPD-M20	250	50	54	58	16.5	30	143	82	44	12	30	1.4
4215LPDM24	4	M24	LPD-M24	400	50	54	61	16.5	36	143	82	44	14	36	1.5
4215LPDM30	5	M30	LPD-M30	500	60	65	82	22	48	170	99	62	17	46	3
4215LPDM36	8	M36	LPD-M36	800	77	85	104	27	62	226.5	123	79	22	55	5.8
4215LPDM42	15	M42	LPD-M42	1,500	95	104	117	36	63	257.5	158	90	22	65	11.1
4215LPDM48	20	M48	LPD-M48	2,000	95	104	120	36	72	257.5	158	90	27	75	11.6
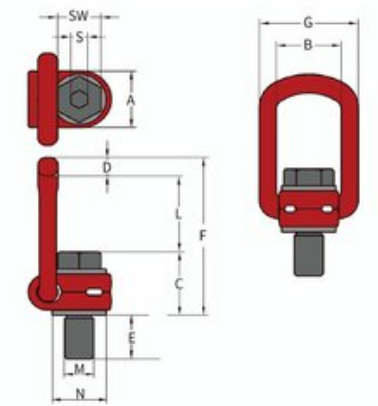
Blueprint